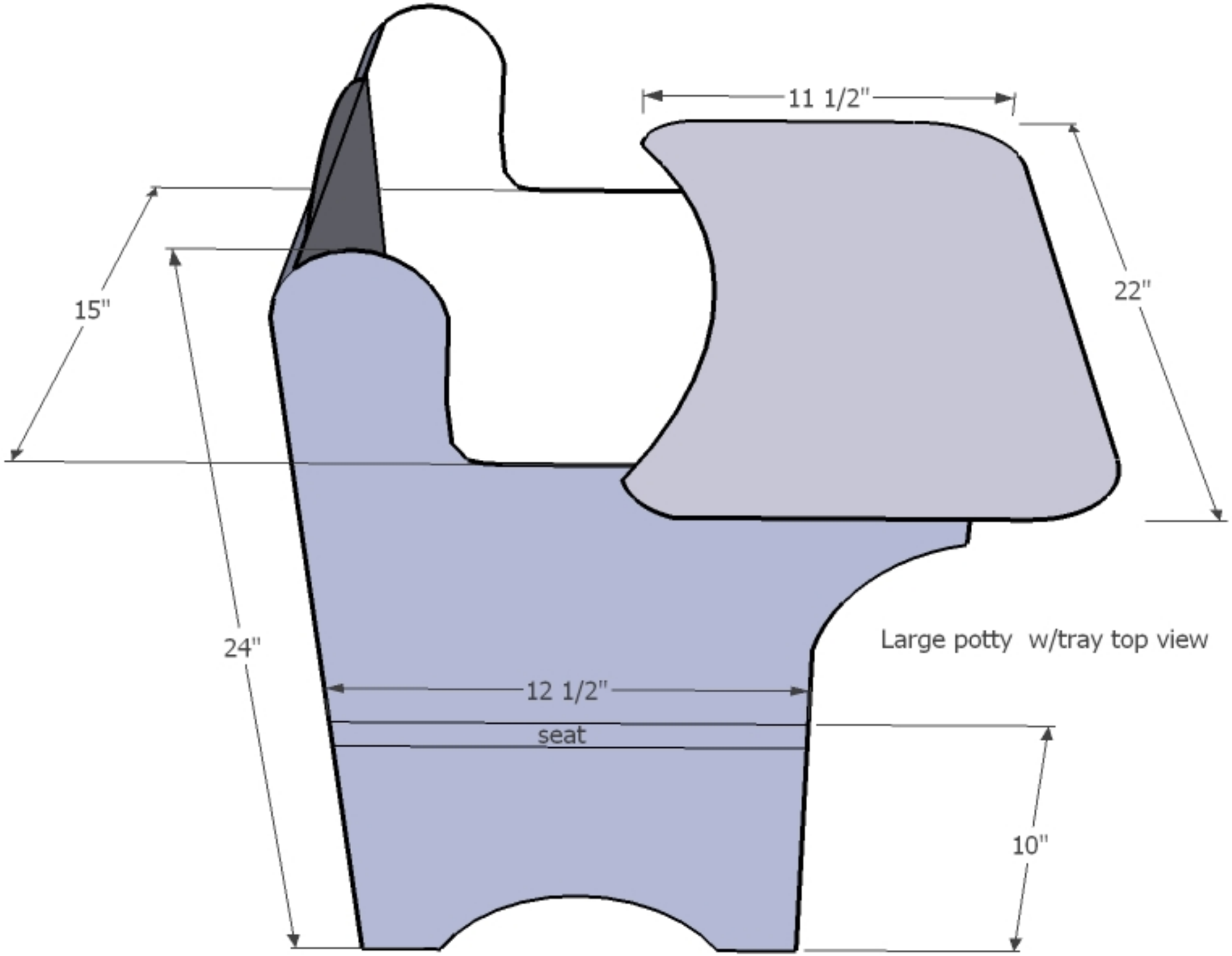
11 1/2"
22"
15"
24"
12 1/2"
seat
10"
Large potty w/tray top view