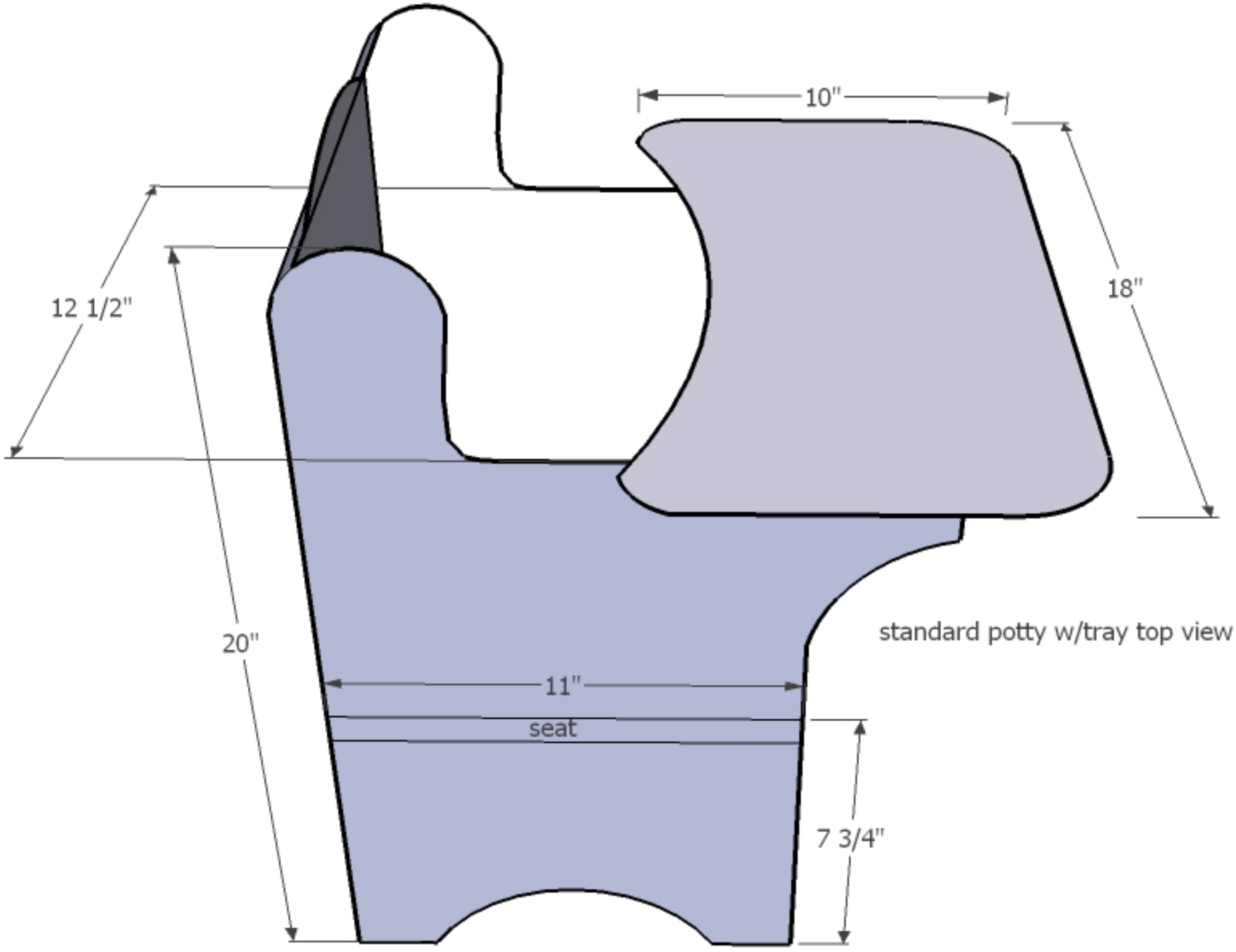

standard potty w/tray top view